Digital Logic: Final Test

Date: 2023. 06. 16 Friday
Time: 18:30 ~ 21:00

1. (25 pts) Find the minimum sum-of-product form (Boolean algebra) of output F in Fig. 1. I_3, Y_1, S_1, Z_3, X_3, and E_1 are the MSB in each circuit module. Assume that the output of ABCD = 0000 is the same with ABCD = 0001. (You don't have to draw the circuit diagram. Just write down the Boolean algebra and some intermediate procedures such as truth table, Karnaugh map)

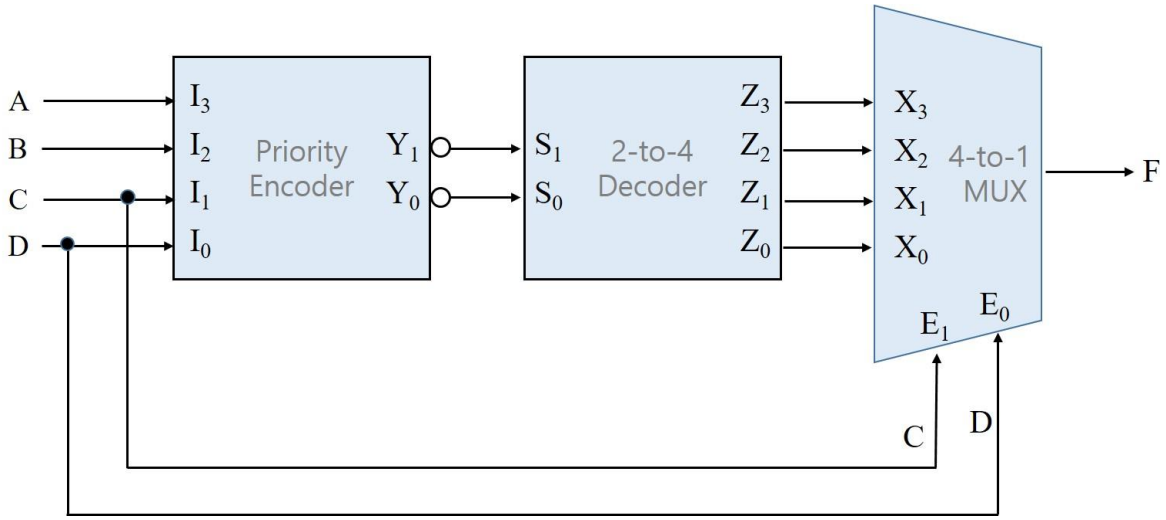

Fig. 1. Problem 1

2. (10 pts) Implement a JK-FF using a T-FF. (You don't have to draw the circuit diagram. Just write down the minimum sum-of-product form and some intermediate procedures such as truth table, Karnaugh map)

3. (25 pts) Fill the state table (shaded region) with the binary numbers for the circuit shown in Fig. 2. (You should keep the order of AB and states number in the table as below.)

	Present states AB	Nest States A^+B^+		Output Z	
		X=0	X=1	X=0	X=1
S_0	00				
S_1	01				
S_2	11				
S_3	10				

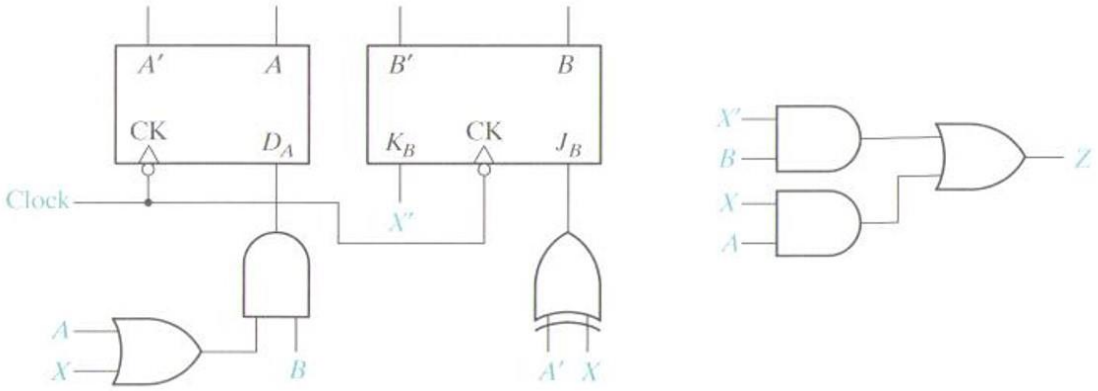

Fig. 2. Problem 3

4. (40 pts) Design the minimum sum-of-product circuits of **inputs of JK-FFs** in the state graph shown in Fig. 3. (You don't have to design the circuit of outputs. Just write down the Boolean algebra of JK-FF's inputs and some intermediate procedures such as truth table, Karnaugh map. And you should keep the order of FFs and states number as in Fig. 3. AB is symbol for FF states and X_1X_2 are the inputs.)

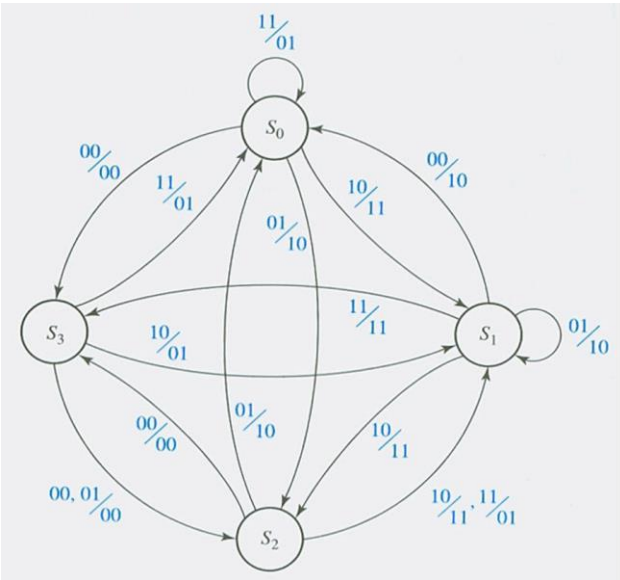

Symbol of states	Bits of states (AB)
S_0	00
S_1	01
S_2	11
S_3	10

Fig. 3. State graph of problem 3, and bit pattern of states.

5. (50 pts) Sequence detector for "1101".

1) (15pts) Draw a state graph of **Mealy machine** to detect the sequence "1101". The output Z is 1 when the sequence "1101" is detected. You should define the minimum number of states, and explain briefly what each state means.

2) (25pts) Design the state machine in (1) with JK-FFs. (You don't have to draw the circuit diagram. Just write down the minimum sum-of-product Boolean algebra and some intermediate procedures such as truth table, Karnaugh map.)

3) (10pts) Draw a state graph of **Moore machine** to detect the sequence "1101". The output Z is 1 when the sequence "1101" is detected. You should define the minimum number of states, and explain briefly what each state means.